LED Nixie Tube Display Driver and I/O Extension Chip CH422

Datasheet
Version: 2
http://wch.cn

1. Overview

CH422 chip can be used for LED nixie tube display driver or I/O extension. CH422 has a built-in clock oscillation circuit, which can dynamically drive 4-bit LED nixie tubes or 32 LEDs. For I/O extension, CH422 can provide 8 bidirectional I/O pins and 4 general-purpose output pins. CH422 exchanges data with MCU through a two-wire serial interface.

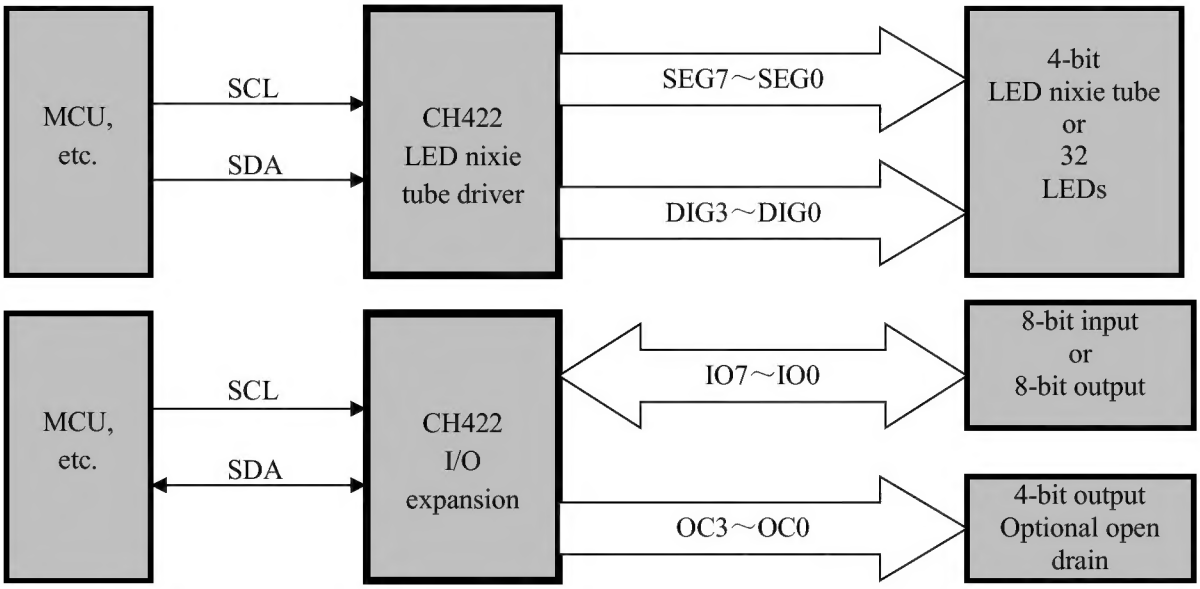

2. Features

- Dynamic display scanning control, direct drive of 4-bit LED nixie tubes or 32 LEDs.
- Built-in current driving stage, segment current driving capacity not less than 15mA, output word current not less than 100mA.
- Built-in clock oscillator circuit, no need to provide external clock or external oscillator components, more anti-interference.
- 8 general-purpose I/O pins, GPIOs, and 4 general-purpose output pins, GPOs, are extended remotely through a two-wire serial interface.
- 4 general-purpose output pins can choose push-pull output or open-drain output.
- Support 3-5V supply voltage and low power sleep, can be awakened by input level change.
- High speed two-wire serial interface, clock speed from 0 to 1MHz, compatible with two-wire I^2C bus, saving pins.
- Adopt SOP16 lead-free package, compatible with RoHS.

3. Package

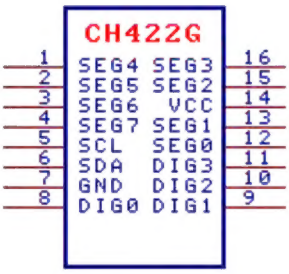

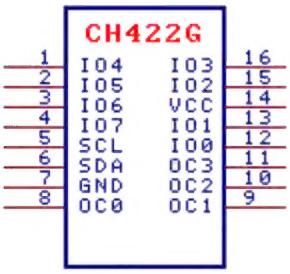

Package	Width of Plastic		Pitch of Pin		Instruction of Package	Ordering Information
SOP16	3.9mm	150mil	1.27mm	50mil	Standard 16-pin patch	CH422G

4. Pins

Pin No.	Pin Name	Pin Type	Description
14	VCC	Power	Positive power, continuous current not less than 100mA
7	GND	Power	Common ground, continuous current not less than 100mA
12～13，15～16，1～4	SEG0～SEG7 IO0～IO7	Three-state output and input	Segment drive of LED nixie tube, active at high level Bidirectional input and output, built-in weak pull-up resistor
8～11	DIG0～DIG3 OC0～OC3	Push-pull or open-drain output	Word drive of LED nixie tube, active at low level General purpose output, optional open-drain output, active at low level
6	SDA	Open-drain output and input	Data input and output of two-wire serial interface, built-in pull-up resistor
5	SCL	Input	Data clock of two-wire serial interface

5. Functional Specification

5.1. Internal Circuit Principle (for function interpretation, for reference only)

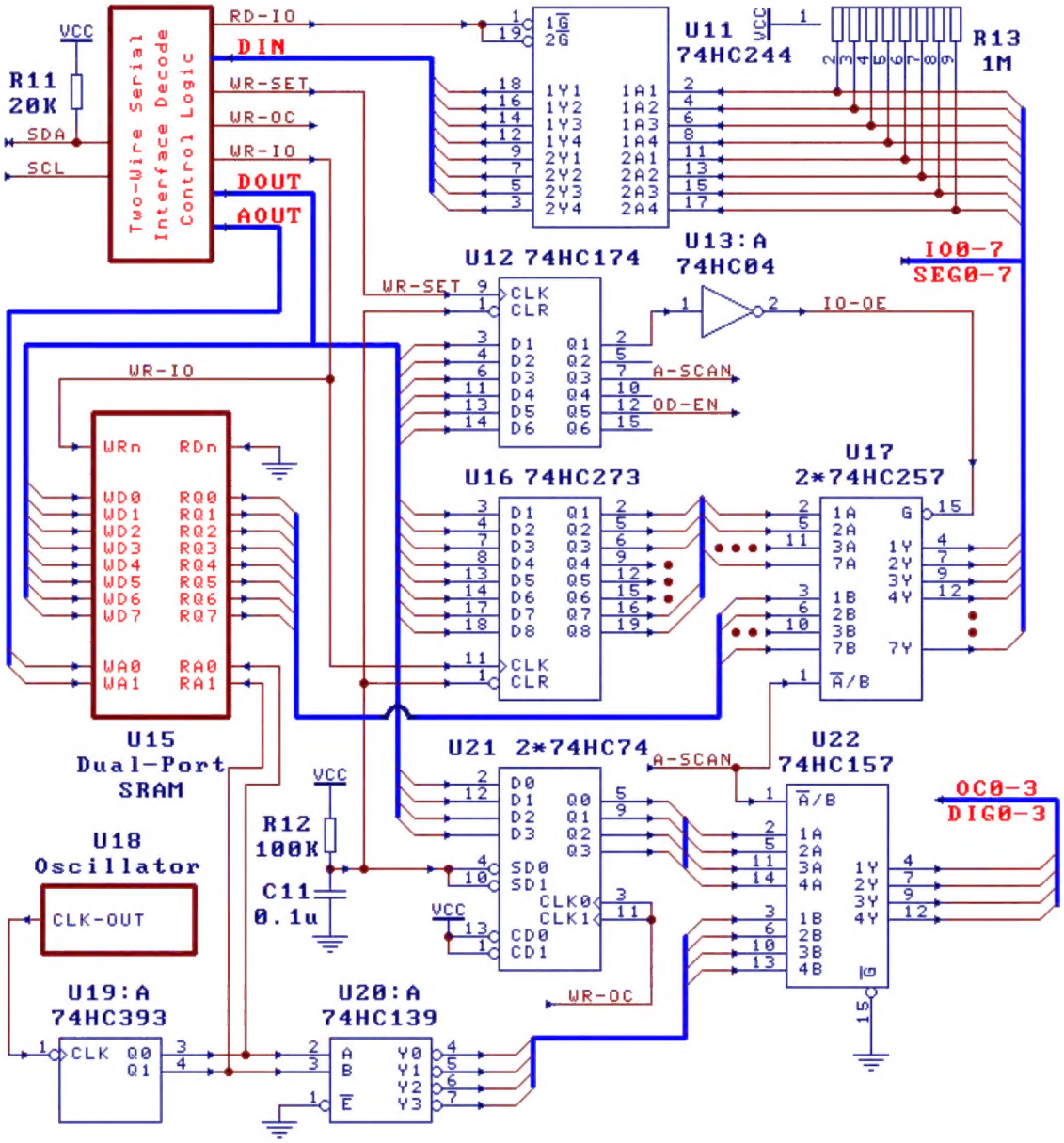

5.2. General Description

For data in this manual, those ending with B are binary numbers and those ending with H are hexadecimal numbers. Otherwise, they are decimal numbers. The bit marked as x indicates that the bit can be any value.

MCU (also CPU, DSP, microprocessor, MCU or other controller) controls CH422 chip through two-wire serial interface. The two-wire serial interface of CH422 is realized by hardware, and MCU can frequently carry out high-speed operation through the serial interface, without reducing the working efficiency of CH422.

5.3. Display Driver

CH422 uses dynamic scanning driver for LED nixie tubes and LEDs. The order is DIG0 to DIG3. When one pin sinks the current, the other pins do not sink the current (refer to U20, U22 and T1-T4 in the figure). CH422 has internal current driving stage, which can directly drive 0.5-inch to 1-inch common cathode LED nixie tube. The segment drive pins SEG6-SEG0 correspond to the segments G-A, the segment drive pin SEG7 corresponds to the decimal point of the LED nixie tube, and the word drive pins DIG3-DIG0 are respectively connected to the cathodes of 4 LED nixie tubes. CH422 can also be connected to an 8×4 matrix

LED array or 32 independent LEDs, or connected to an external inverse phase driver to support a common anode LED nixie tube, or connected to a high-power tube to support a large-size LED nixie tube.

CH422 has four 8-bit data registers (U15 in the figure), which are used to store 4 word data, corresponding to 4 LED nixie tubes driven by CH422 or 4 groups of LEDs, 8 LEDs in each group. The bits 7-0 of the word data in the data register correspond to the decimal points and segments G-A of LED nixie tubes respectively. For LED array, the data bit of each word data uniquely corresponds to an LED. When the data bit is 1, the segment of the corresponding LED nixie tube or LED will be on; when the data bit is 0, the segment of the corresponding LED nixie tube or LED will be off. For example, the bit 0 of the third data register is 1, so the segment A of the corresponding third LED nixie tube is on. The following diagram shows the segment name of the LED nixie tube.

5.4. Bidirectional I/O Pins

The pins IO7-IO0 of CH422 are bidirectional I/O pins, the default direction is the input direction, and they are used to input the current state of external pins. When they are set to the output direction, high and low levels can be output to drive LEDs or extend I/O.

5.5. General purpose Output Pins

The pins OC3-OC0 of CH422 are push-pull or open-drain output pins, and are push-pull output pins by default.

After the open-drain output mode is selected, there are only two states of "low level output" and "no output". High level cannot be output, and the default is "no output".

In dynamic scan display drive mode, the pins OC3-OC0 can be used to drive each common terminal of the common cathode LED nixie tube, and can absorb large sinking current in pulse mode.

5.6. Power on Reset

CH422 has built-in power on reset circuits (R12 and C11 in the figure), which are used to restore the internal registers to the default state when the chip is just powered on. For example, after each power-on, the bidirectional I/O pin is in the input state and the general-purpose output pin is in the high level state.

5.7. Serial Interface

CH422 has a two-wire serial interface realized by hardware, including two main signal lines: serial data clock input line SCL, serial data input and output line SDA.

SDA is a quasi-bidirectional signal line with pull-up resistors, and is at high level by default. SDA is used for serial data input and output. The high level represents bit data 1, and the low level represents bit data 0. The sequence of serial data input is that the high bit is at the front and the low bit is at the back.

The SCL is the input signal line, which is at high level by default. SCL is used to provide a serial clock, CH422 inputs data from SDA on its rising edge and outputs data from SDA on its falling edge.

SDA falling edge occurring during the SCL high level period is defined as the start signal of the serial interface, and SDA rising edge occurring during the SCL high level period is defined as the stop signal of the serial interface. CH422 receives and analyzes the command only after detecting the start signal. Therefore, when I/O pin resources of MCU are short, SCL pin can be shared with other interface circuits while SDA pin

state is unchanged. Both SCL and SDA pins can be shared with other interface circuits if it is possible to ensure that SDA pin changes only when SCL pin is at low level.

The communication process between MCU and CH422 is always divided into six steps. According to the operation direction of MCU, it is divided into two types: write operation for output data and read operation for input data. For the specific process, please refer to Example Program.

Write operation consists of six steps: output start signal, output byte 1, response 1, output byte 2, response 2 and output stop signal. Among them, the start signal and the stop signal are as mentioned above, response 1 and response 2 are always fixed to 1, output byte 1 and output byte 2 respectively contain 8 data bits, namely, one byte of data.

Read operation consists of six steps: output start signal, output byte 1, response 1, output byte 2, response 2 and output stop signal. Among them, the start signal and the stop signal are as mentioned above, response 1 and response 2 are always fixed to 1, output byte 1 and output byte 2 respectively contain 8 data bits, namely, one byte of data.

The following figure shows an example of write operation. The byte 1 is 01001000B, namely, 48H; the byte 2 is 00000001B, namely, 01H.

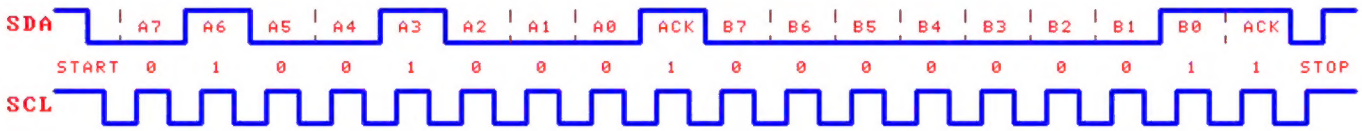

6. Operation Commands

The operation commands of CH422 are divided into 4 groups. Start signal, stop signal, response 1 and response 2 are the same for each command, except that the data of output bytes 1 and byte 2 are different and that byte 2 is transmitted in different direction. Byte 1 is used for two-wire serial port control logic, or used for generating addresses (AOUT bus in figure), and byte 2 is used for input and output data (DIN and DOUT buses in figure).

6.1. Set System Parameter Command (WR-Set Control Line in Figure)

The output byte 1 of this command is 01001000B, namely 48H; the output byte 2 is [SLEEP]00[OD_EN]0[A_SCAN]0[IO_OE]B.

Set System Parameter Command is used to set the system-level parameters of CH422 (written to U12 in the figure): output enable IO_OE of bidirectional I/O pins IO7-IO0, dynamic display automatic scan enable A_SCAN, open-drain output enable OD_EN of output pins OC3-OC0 and low power sleep control SLEEP. After power-on reset, the above parameters are 0 by default.

IO_OE is used to control the three-state output of bidirectional I/O pins IO7-IO0. When it is 0, the output is disabled (it is used for input through U3 in the figure); when it is 1, the output is enabled (output through U17 in the figure).

A_SCAN is used to control the dynamic display of automatic scan function. When it is 0, I/O extension function is enabled, IO7-IO0 and OC3-OC0 are used for general-purpose input and output (select U16 in the figure to provide IO pin data and select U21 to provide OC pin data); when it is 1, the LED nixie tube dynamic display function is enabled (select U15 in the figure to provide segment data and select U20 to provide word data).

OD_EN is used to enable the open-drain output of the pins OC3-OC0. When it is 0, OC3-OC0 are push-pull output pins (outputting low level and high level); when it is 1, OC3-OC0 are open-drain output pins (only

outputting low level or not outputting).

SLEEP is used to put CH442 into a low-power sleep state, so as to save power. CH422 in low-power sleep state can be woken up by any of the following two events. The first event is input level change, that is, the current state input by the pins IO7-IO0 is different from the data in the output register (U16 in the figure) previously written into the pins IO7-IO0. The second event is receiving of next operation command sent by MCU. When CH422 is waken up, SLEEP bit is automatically reset to 0. Sleep and Wake Up operations do not affect other working states of CH422.

This command does not affect the data in the output registers of the pins and the internal data buffer. Some common commands are as follows:

(1)、Byte 2 is 00H, enabling I/O extension; IO7-IO0 are inputs, OC3-OC0 are general-purpose outputs;
(2)、Byte 2 is 11H, enabling I/O extension; IO7-IO0 are outputs, OC3-OC0 are open-drain outputs;
(3)、Byte 2 is 05H, enabling LED nixie tube automatic scan function; SEG7-SEG0 and DIG3-DIG0 are outputs.

6.2. Set General-purpose Output Command (WR-OC Control Line in Figure)

The output byte 1 of this command is 46H, and the output byte 2 is 0000[OC_DAT]B, namely, 8-bit data from 00H to 0FH, to write the output register of the general-purpose output pins OC3-OC0 (U21 in the figure). If 0 is written, the pins will output low level; if 1 is written, the pins will output high level.

6.3. Load Segment Data Command/Set Bidirectional I/O Command (WR-IO Control Line in Figure)

The output byte 1 of the command is 70H, 72H, 74H and 76H. The bits 2-1 are the addresses (AOUT bus in the figure), which are used to select the address of double-port SRAM (U15 in the figure). The output byte 2 is [IO_DAT]B, namely, 8-bit data between 00H and 0FFH. It is used to write the specified address of dual-port SRAM and the output register of bidirectional I/O pins IO7-IO0 (U16 in the figure). If IO_OE is 1, output will be allowed; if it is 0, the pin will output low level; if it is 1, the pin will output high level.

6.4. Read Bidirectional I/O Command (RD-IO Control Line in Figure)

The output byte 1 of this command is 01001101B, namely, 4DH; the input byte 2 is the current pin state of bidirectional I/O pins IO7-IO0.

Read Bidirectional I/O Command is used to get the current state of the pins IO7-IO0. When IO_OE is 0, the input state will be gotten, otherwise the output state will be gotten. The command is read operation, only command with data return. MCU must first release SDA pin (three-state output is disabled or pulled up to the high level), and then CH422 outputs the current pin state from SDA pin.

7. Parameters

7.1. Absolute Maximum Value

Critical value or exceeding the absolute maximum value may cause the chip to work abnormally or even be damaged.

Name	Parameter description	Min.	Max.	Unit
TA	Ambient temperature during operation	-40	85	℃
TS	Ambient temperature during storage	-55	125	℃
VCC	Supply voltage (VCC connects to power, GND to ground)	-0.5	6.0	V
VIO	Voltage on the input or output pins	-0.5	VCC+0.5	V
IMoc	Continuous drive current of single DIG/OC pin	0	30	mA

IMdig	1/4 pulse drive current of single DIG/OC pin	0	120	mA
IMio	Continuous drive current of single SEG/IO pin	-25	25	mA
IMall	Total continuous drive current of all SEG/IO pins Or total continuous drive current of all DIG/OC pins	0	160	mA

7.2. Electrical Parameters

Test conditions: TA=25°C, VCC=5V; if VCC=3.3V, the current in the table shall be multiplied by 40%.

Name	Parameter description	Min.	Typ.	Max.	Unit
VCC	Supply voltage	3	5	5.3	V
ICC	Operating current	0.1	80	150	mA
ICCs5	Static current at 5V (SCL and SDA are at high level)		0.4	0.9	mA
ICCs3	Static current at 3.3V (SCL and SDA are at high level)		0.1	0.3	mA
VIL	Low level input voltage of SCL and SDA pins	-0.5		0.8	V
VIH	High level input voltage of SCL and SDA pins	2.0		VCC+0.5	V
VILio	Low level input voltage of IO pin	-0.5		0.6	V
VIHio	High level input voltage of IO pin	1.9		VCC+0.5	V
VOLoc	Low level output voltage of DIG/OC pins (-100mA)		0.6	0.8	V
VOLoc	Low level output voltage of DIG/OC pins (-30mA)		0.2	0.3	V
VOHoc	High level output voltage of DIG/OC pins (5mA)	VCC-0.5			V
VOLio	Low level output voltage of SEG/IO pins (-15mA)			0.5	V
VOHio	High level output voltage of SEG/IO pins (20mA)	VCC-0.5			V
VOL	Low level output voltage of SDA pin (-4mA)			0.5	V
IUP1	Input weak pull-up current of IO pin	1	5	10	uA
IUP2	Input pull-up current of SDA pin	150	250	400	uA
VR	Default voltage threshold of power on reset	2.3	2.6	2.9	V

7.3. Timing Parameters

Test Conditions: TA=25°C, VCC=5V, Refer to the Attached Drawing.

(Note: The unit of measurement in this table is nanosecond, namely, 10^{-9} seconds. If the maximum value is not indicated, the theoretical value can be infinite.)

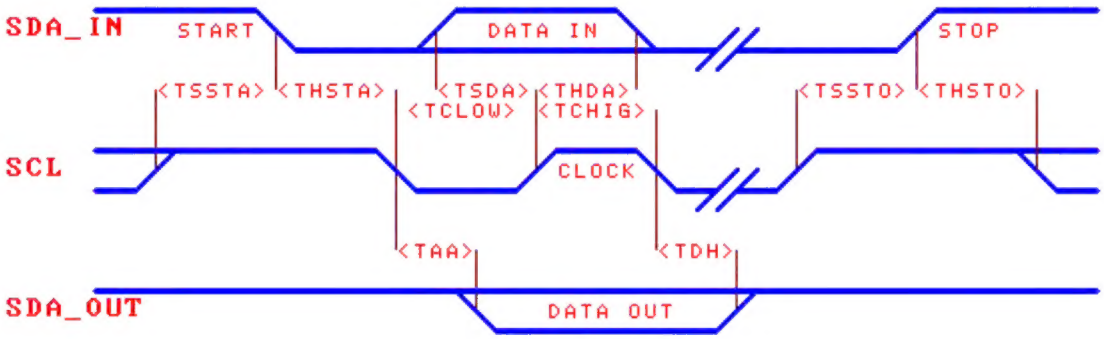

Name	Parameter description	Min.	Typ.	Max.	Unit
TPR	Reset time generated during power on detection	15	30	80	mS
TSSTA	Setup time of SDA falling edge start signal	100			nS
THSTA	Hold time of SDA falling edge start signal	100			nS
TSSTO	Setup time of SDA rising edge stop signal	100			nS
THSTO	Hold time of SDA rising edge stop signal	100			nS
TCLOW	Low level width of SCL clock signal	100			nS
TCHIG	High level width of SCL clock signal	100			nS
TSDA	Setup time of SDA input data to SCL rising edge	30			nS
THDA	Hold time of SDA input data to SCL rising edge	10			nS
TAA	Delay SDA output data to SCL falling edge	3		30	nS
TDH	Delay of invalid SDA output data to SCL falling edge	3		40	nS
Rate	Average data transmission rate	0		1M	bps

8. Application

8.1. LED Nixie Tube Display Driver

CH422 is connected to the external MCU through two-wire serial interfaces SCL and SDA. Capacitors C1 and C2 are arranged near the power pins of CH422 to decouple the power supply and reduce the interference caused by high drive current.

CH422 can drive 4 common cathode LED nixie tubes directly and dynamically. After the pins on the same segments of all LED nixie tubes are connected in parallel (segments A-G and decimal point), they are connected with the segment drive pins SEG0-SEG7 of CH422 through a series current limiting resistor R1. The common cathodes of the LED nixie tube are driven by the pins DIG0-DIG3 of CH422 respectively. The resistor R1 connected with the segment pins in series is used to limit and balance the segment drive current. At the supply voltage of 5V, the series resistance 200Ω often corresponds to the segment current 13mA. CH422 can internally limit the segment drive current, so R1 can be eliminated.

If a common anode LED nixie tube is required to be driven or the drive current is required to be increased, refer to the methods in the data manual for CH452 chip.

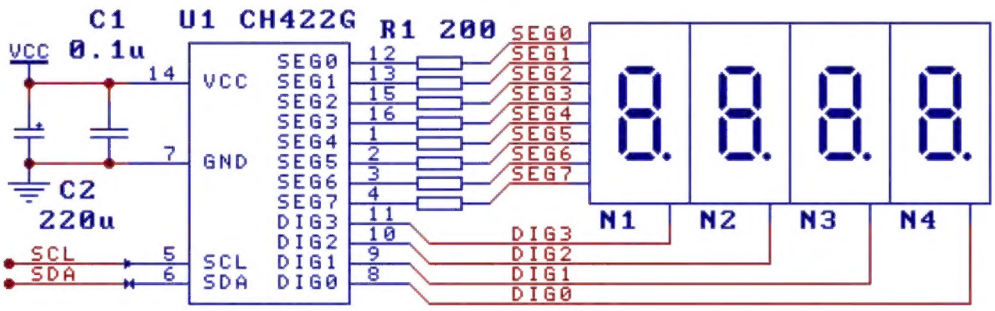

8.2. Remote I/O Extension

CH422 is connected to the external MCU through two-wire serial interfaces SCL and SDA, and the capacitor C3 is used for power supply decoupling.

The pins IO7-IO0 of CH422 can be used for input or output. In the figure, the pins IO6 and IO7 are used to drive two-polarity LED. The pins OC3-OC0 pins of CH422 can only be used for output. In order to get a larger continuous current drive capability, the open-drain output can be enabled, and the pins OC1, OC2 and OC3 can be connected in parallel according to the figure to drive the relay K1.

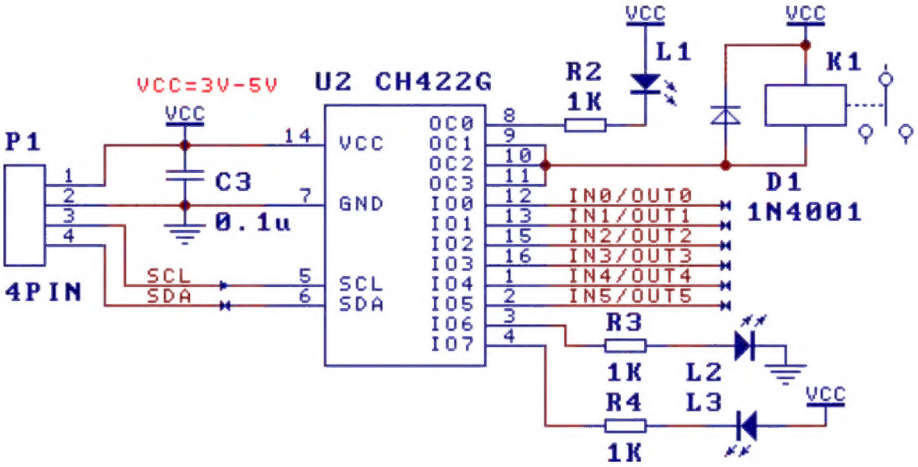

8.3. Anti-interference

As CH422 has high drive current, high glitch voltage will be generated on the power supply. Therefore, if the PCB wiring of the power line or ground wire is not reasonable, it may affect the stability of MCU or CH422. It is recommended to use a thicker power line and ground wire, and connect the power supply decoupling capacitor in parallel between the positive and negative power supplies close to CH422.

For the application environment with strong interference, MCU can refresh CH422 every a few seconds, including reloading the output registers of the I/O pins and resetting system parameters.

In addition, if CH422 is driven remotely by the I/O pin of the standard MCS-51 MCU, the pull-up capacity of the I/O pin for MCS-51 MCU shall be strengthened, so as to maintain a good digital signal waveform during remote transmission. The resistance of the pull-up resistor can be 500Ω to 10KΩ, and no pull-up resistor is required at short range.

8.4. MCU Interface Program

The website provides part of C language and ASM assembly interface program for MCU.